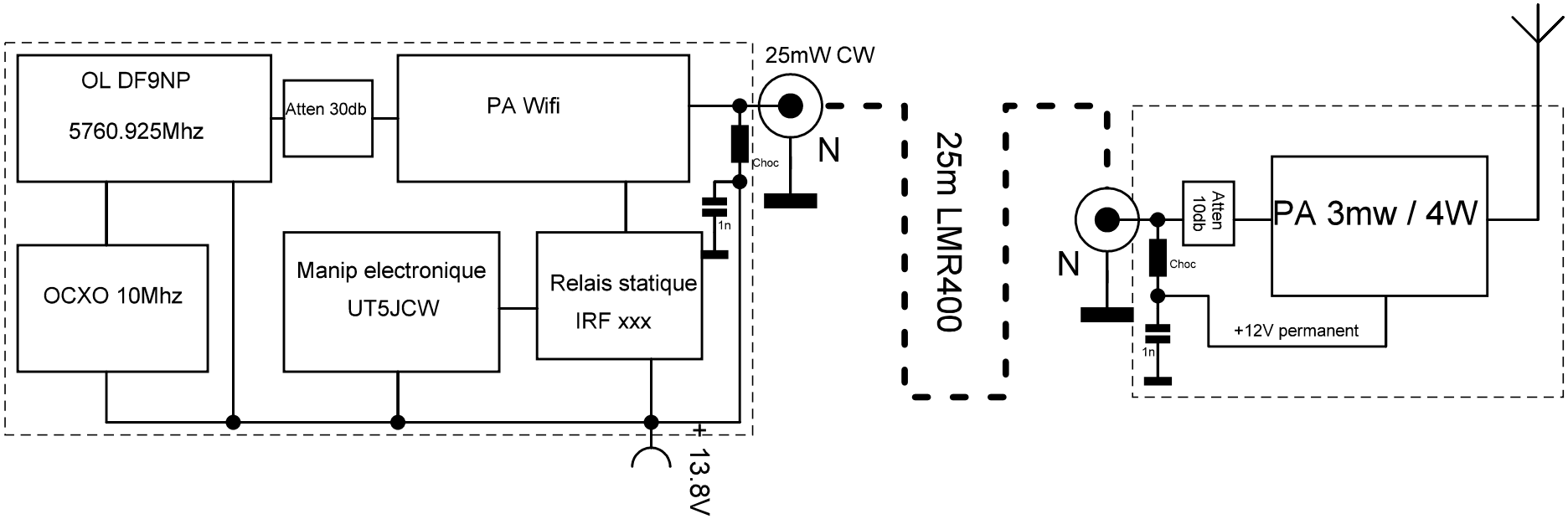
OL DF9NP
5760.925Mhz
Atten 30db
PA Wifi
25mW CW
N
Choc
1n
OCXO 10Mhz
Manip electronique
UT5JCW
Relais statique
IRF xxx
+
13.8V
25m LMR400
N
Choc
1n
Atten
10db
PA 3mw / 4W
+12V permanent